Proceedings of the 16th International Conference on Soil Mechanics and Geotechnical Engineering

doi:10.3233/978-1-61499-656-9-3639

Physical modelling

David Muir Wood
Department of Civil Engineering, University of Bristol, UK

ABSTRACT
A brief description is given of the state-of-the-art of physical modelling of geotechnical systems including comments on the role of single gravity modelling. Examples of the consequences of the decisions made in modelling geotechnical processes are presented. Some possibilities for site investigation and instrumentation at model scale are described. The potentials of modelling and testing are compared.

1 INTRODUCTION

Physical modelling is performed in order to study particular aspects of the behaviour of prototypes. Full-scale testing is in a way an example of physical modelling where all features of the prototype being studied are reproduced at full scale. However, most physical models will be constructed at much smaller scales than the prototype precisely because it is desired to obtain information about expected patterns of response more rapidly and with closer control over model details than would be possible with full-scale testing. This usually implies that parametric studies should be performed in which key parameters of models are varied in order to discover their effect. This itself implies that many model tests will be required and in addition it is often desirable to repeat individual tests in order to gain greater confidence in the results that are obtained.

If the model is not constructed at full scale then we need to have some idea about the way in which we should extrapolate the observations that we make at model scale to the prototype scale. If the material behaviour is entirely linear and homogeneous for the loads that we apply in the model and expect in the prototype then it may be a simple matter to scale up the model observations and the details of the model may not be particularly important.

However, all extrapolation depends on the details of the underlying theoretical model which must inform our physical modelling and, if the material behaviour is nonlinear, or if the geotechnical structure to be studied contains several materials which interact with each other, then the development of this model will become more difficult. It then becomes even more vital to consider and understand the nature of the expected behaviour so that the details of the model can be correctly established and the rules to be applied for extrapolation of observations are clear. Understanding the model will guide dimensional analysis and encourage efficient modelling.

This paper is drawn from material in Muir Wood (2004b).

2 SINGLE GRAVITY MODELLING

Scaling factors are needed in order to extrapolate from observations made in model tests to predict behaviour at prototype scale. There are links between apparently independent scaling choices. Where some composite factors appear to run into difficulties it may be necessary to make alternative choices but this must always be done with care. For example, if we consider that soil strain is a first order indicator of mobilisation of strength for nonlinear soils then it will be wise to try to ensure that the scale factor for strains is always kept at unity.

It is harder to satisfy similarity constraints for single gravity modelling than on a geotechnical centrifuge at increased acceleration levels. Although one might assume that all aspects of stress:strain response can be scaled in some understandable way with stress, there is a probable expectation that it will be difficult to rely on a small single gravity model to provide an accurate representation of the response of a prototype – and this is the principal justification of centrifuge modelling.

The single gravity laboratory model retains three attractions. As with other laboratory modelling the boundary conditions are well defined and controlled: the physical model provides a source of reliable data for supporting numerical modelling and back analysis. The size of the models can be quite large so that the linear model scale from typical prototypes may be low. For dynamic modelling (Muir Wood *et al.*, 2002), shaking tables are typically used to test the seismic response of quarter scale model buildings, for example. Other undesirable effects that may be associated with small models (for example, particle size problems) may be somewhat avoided. Because the models are large the space available for instrumentation and actuators will be greater and more subtlety in loading, control and observation will be feasible. The disturbance to the soil arising from the finite size of instruments will be correspondingly lower.

3 CENTRIFUGE MODELLING

Many of the difficulties associated with scaling can be avoided if the stresses at corresponding points in the model and the prototype are the same. This can be achieved using a geotechnical centrifuge to increase the local equivalent gravitational field in order to balance the decrease in stresses that would otherwise result from the chosen linear scale. We present here some of the current possibilities of geotechnical centrifuge modelling: more detail can be found in Kimura *et al.* (1998), Phillips *et al.* (2002) and Taylor (1995). Developments in robotics, control, electronics and miniaturisation are occurring so rapidly that any description of instrumentation or of techniques for modelling geotechnical processes at small scale goes rapidly out of date.

4 GEOTECHNICAL PROCESSES

The possibilities of modelling geotechnical processes on a centrifuge are limited only by the ingenuity of centrifuge users. The sorts of things that we might wish to do include: formation of cut slopes; creation of embankments; installation and loading of shallow or deep foundations; construction of retaining structures; formation of tunnels; and so on. Ideally we want to do as much as possible while the centrifuge is ‘in flight’ but this will not always be feasible because of the need to set in place and commission adequate instrumentation to monitor the subsequent performance of our systems.

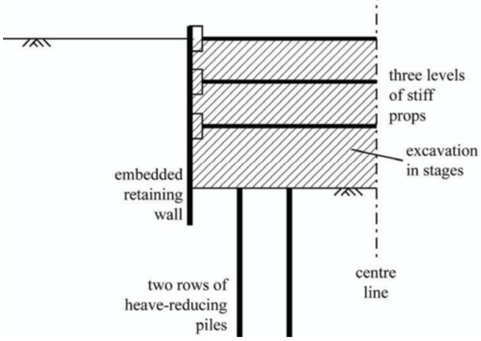

Figure 1. Model of propped retaining wall (inspired by McNamara & Taylor, 2002)

We are trying to follow the stages of a real construction process as closely as possible, even if we are not trying to model a particular prototype. Often we will need to create a stable geotechnical system and then perturb it in some way – perhaps to bring it to failure. For example, we might want to study the effects of using heave-reducing piles to limit the ground movements occurring behind an excavation (Fig 1). There are a number of stages involved in this modelling which should, as far as possible, match the stages of prototype construction. It will inevitably be necessary to make compromises.

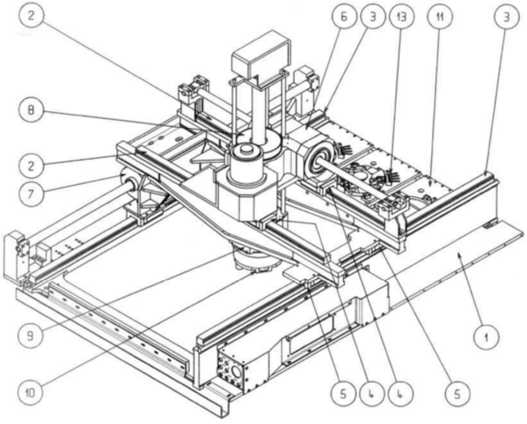

Figure 2. On-board centrifuge robot at LCPC, Nantes (Derkx *et al.* 1998)

A surface footing is probably the simplest geotechnical system to model on the centrifuge. All that is required is some hydraulic or electro-mechanical device to lower the footing to the surface of the soil layer and then proceed to load it or cause penetration of the soil. Devices such as the LCPC robot (Fig 2) are evidently capable of this and other manoeuvres.

Other geotechnical processes may require more compromises – some of which are more acceptable than others. Installation of individual model piles can be achieved using an on-board robot, by driving or steady jacking. The *g*-level at installation turns out to be rather important (Yet *et al.* 1994; Dyson & Randolph, 1998). The effect of development of lateral pressure on model piles installed in different ways can be understood by considering the stress paths of typical elements around the pile. The driving of a pile will tend to increase the horizontal stress, probably without much drainage in a clay. The horizontal stress may possibly increase even above the vertical stress. If this occurs at low stress level, then subsequent stress increase will seek to reestablish a generally one-dimensional compression regime and the stresses may end up close to the K_0 line. If pore pressure equilibration is required after pile installation at high stress level, however, then the total horizontal stresses may perhaps not change significantly and the soil will be left with *in-situ* radial stresses, before loading of the pile takes place, greater than the vertical stresses.

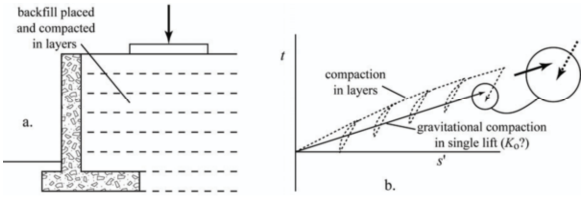

Figure 3. (a) Retaining wall supporting layers of backfill; (b) comparison of stress paths for typical element in backfill.

Retaining structures are (simplistically) required either to support ground as excavation occurs in front of them, or to support new fill progressively placed behind them. The latter construction process might be modelled in the same way as the construction of an embankment by depositing material in flight behind a model wall. But in reality compaction of each layer would be required and the slightly uncontrolled nature of such a deposition process has usually led centrifuge modellers to prepare the fill at 1*g* and then to load it by bringing the centrifuge to the desired acceleration – and then perhaps apply some surcharge or footing loading as an additional perturbation behind the wall (Fig 3). Although the *general* direction of the stress changes may not be too different, in detail there may be some difference between the desirable and the modelled stress paths (Fig 3b). Noting the kinematic nature of soil stiffness (Muir Wood, 2004a), however, the direction of the stress path immediately before the application of the footing load may be almost completely opposite (inset in Fig 3b) and this would have a major effect on the initial stiffness of the footing.

Excavation in front of a pre-installed wall once again poses robotic challenges (Gaudin *et al.*, 2002). The problem is simultaneously to remove soil-like horizontal stresses *and* vertical stresses – and, desirably, to do this in stages leaving real soil below each excavation level. Practically, the easiest way to apply a varying load over a deforming surface is to use fluid pressure. It is important to ponder the differences between prototype and model stress paths and to understand how those differences may affect the eventual geotechnical system response.

The capabilities of an on-board robot are limited by the proportion of the centrifuge payload that can be sacrificed for hardware as opposed to soil. Different approaches to the problem of simulating earthquake loading on a centrifuge have confronted this problem in different ways. On a 1*g* earthquake simulator actuators are used to control all six translation and rotation movements. On a centrifuge, in general, researchers have limited themselves to one – horizontal – axis of shaking, relying on stiff bearings to prevent other uncontrolled parasitic modes of oscillation. Testing at 1*g* has shown how important it is to control – or at least monitor – all six degrees of freedom (even if some of the motions are *intended* to be zero) so that the detail of the motion to which a model has been subjected can be completely and correctly known. It may be much easier to generate more or less sinusoidal motion – through conversion of rotary to linear motion as with the Cambridge ‘stored angular momentum’ shaker (Madabhushi *et al.* 1998) – than the rather random excitation that characterises a typical earthquake – though the centrifuge at Hong Kong University of Science and Technology has a two axis shaking table mounted with actuators controlling the two (model) horizontal degrees of freedom. The VELACS project, which compared capabilities for physical and numerical modelling of liquefaction events caused by seismic loading, showed how important are the details of model preparation and

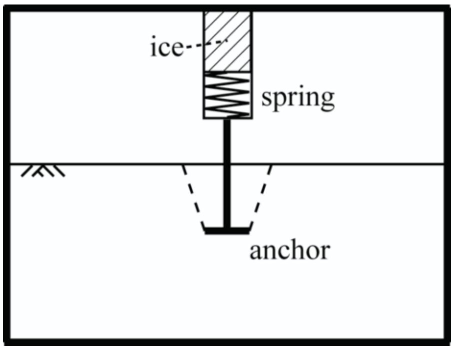

Figure 4. Use of melting block of ice to control pull-out loading of a buried anchor (Allersma, 1998)

the exact replication of imposed model shaking if reasonably similar results are to be obtained at different testing locations (Arulanandan & Scott, 1994).

At the other extreme, Allersma (1998) shows how the melting of a block of ice can be used to produce loading of centrifuge models extremely economically (if slightly uncontrollably) and with minimal penalty in terms of use of payload capacity. For example, a prestressed spring restrained by a block of ice can form the loading system for the pull-out of a buried anchor (Fig 4). Obviously such imaginative devices are ideal for small centrifuges which are to be made readily available for student projects with limited technical support.

5 SITE INVESTIGATION

Whatever method is used to prepare the soil layers for subsequent perturbation on the centrifuge it is helpful to have some techniques that can be used to study the *in-situ* properties of the soil at the augmented acceleration levels at which they are to be employed and to explore spatial variability across a model as well as profiles with depth. Techniques that have been used at prototype scale can be adapted for use at small scale. Thus Garnier (2001, 2002) describes the use of miniature cone penetrometer, vane and even pressuremeter in centrifuge models.

The cone penetrometer is widely used for site investigation and site characterisation and for construction control at full scale. There are limits to the miniaturisation of model cones for centrifuge application: for example, the diameter needs to be large in relation to the particle size (for example, d_{50}) in order to obtain reliable results; and the penetrometer needs to be strong enough not to buckle as it is pushed in. Gui *et al.* (1998) suggest a limit $D_{\text{cone}}>20d_{50}$ and also note that it takes a penetration of about $5D_{\text{cone}}$ to mobilise cone resistance so that the precise detection of strength changes will be slightly smeared. (However, Foray *et al.* (1998) find that for model piles $D_{\text{pile}}>200d_{50}$ is needed to avoid particle scale effects at the interface between pile and soil.)

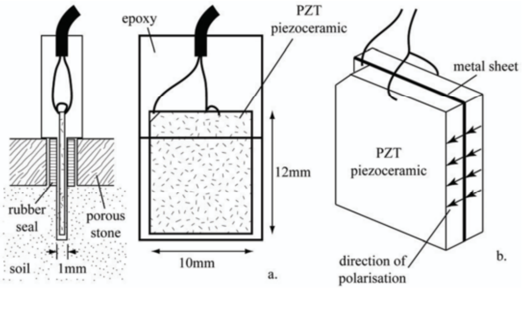

Figure 5. Bender element for laboratory geophysical studies: (a) mounted in a triaxial end platen; (b) construction of element (after Lings & Greening, 2001)

The analytical intepretation of the output of any penetration device requires some assumed mechanism of deformation around the device. Theoretical analysis of cone penetration draws an analogy with the creation of a spherical or cylindrical cavity in the soil which depends on both the undrained strength c_u and the shear stiffness G of the soil. Interpretation of cone tests to give a profile of strength requires accompanying assumptions.

Plastic flow *around* a cylindrical object is, however, capable of close theoretical analysis and, exploiting this, the T-bar has been developed by Stewart and Randolph (1991) as a device which can be pushed or pulled through a clay layer to record the profile of average local undrained strength.

Geophysical techniques are used in the field to give information about shear wave velocities and hence shear stiffnesses. Shear wave velocity can only be deduced by measuring travel time over a known distance so it gives a smeared out average soil property between transmitter and receiver. Miniature piezoceramic devices – 'bender elements' (Fig 5) – are quite widely used for measurement of shear wave velocities in laboratory element tests and the same technology can be used to record shear wave velocities and *changes* in shear wave velocities in model tests. By varying the connections is it possible to use the same element to send and receive shear and compression waves (Lings and Greening, 2001). Such geophysical techniques can now be used to build a picture of the evolving elastic anisotropy of the soil. It is quite likely that there will be continuing developments in their application to model tests.

6 INSTRUMENTATION

In full-scale geotechnical systems we might wish to monitor pore pressures, displacements, contact stresses, and structural resultants (such as bending moments) and, in dynamic situations, accelerations. We will want to measure these things in our centrifuge models too. The two constraints that are encountered are the need to be able to operate in a high ambient acceleration field and the need for miniaturisation if the observations are to be regarded as plausibly point values.

Pore pressures are typically measured with Druck transducers – 6.35mm diameter. Where the scale of detail of a geotechnical system is small – one could imagine modelling sand drains which, in a prototype are at 1.5m centres, at a scale of 1/100, or sand compaction piles of model diameter 20mm at 40mm centres (Lee, 2002) – the precise location of the pore pressure transducer between the drains may be rather important.

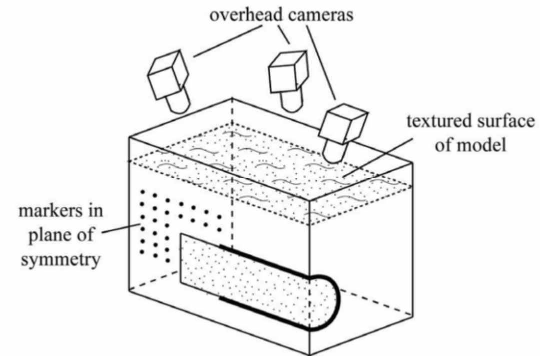

Figure 6. Close-range photogrammetry for recording three-dimensional surface displacements (inspired by Taylor *et al.* 1998).

Contact stresses are difficult to measure reliably at any scale. Garnier (2001) describes very stiff miniature cells which have been used with model hopper flow tests. Strain gauging of structural elements may be more reliable and it may be possible to deduce interface stresses from gradients of bending moment or axial force. However, differentiation of experimental observations always introduces errors. The use of tactile pressure sensitive mats is described by Springman *et al.* (2002). The sensitivity is not particularly good (range/256) and calibration is not straightforward but this is evidently a promising emerging technology.

Displacements at discrete points on a model can be measured with LVDTs. Non-contact laser techniques can be used to monitor displacements across surface profiles: these measurements are most useful for recording displacement patterns under rather steady state conditions. Close range photogrammetry (Fig 6) can be used to give a three-dimensional instantaneous view of the surface displacements using two or three cameras mounted above the surface of the model. The procedure is essentially similar to that used in mapping from aerial photography except that the cameras are fixed and it is the actual movement of the ground surface that leads to differences in successive photographic images.

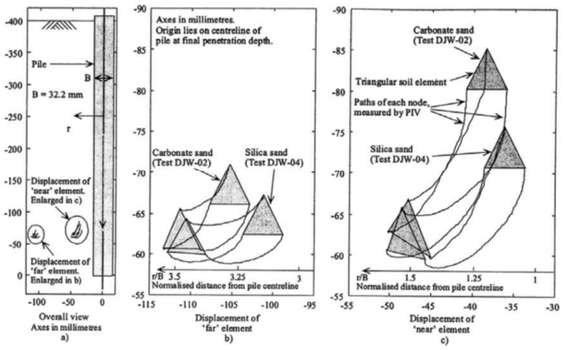

Figure 7. Close range digital photography used to detect displacements and particle rotations around a driven pile (White & Bolton, 2002)

Plane models can be viewed through a lateral glass panel. Discrete markers can be placed in the lateral face of the model as it is being prepared and then monitored by flash photography while the centrifuge is in flight (Fig 6). Measurement of the positions of these markers on successive photographs can be used to deduce fields of strain increment during the model test. Any measurement of displacements seen through the transparent side of a plane model may be influenced by friction between the soil and the side boundary.

Alternatively, if the soil used in the model has a clearly visible texture – or it is possible to apply some texture to the visible surface (Take & Bolton, 2002) – then close range digital photography can be used with subsequent Particle Image Velocimetry (PIV) to record the changing appearance of the fabric. White & Bolton (2002) give typical displacement precisions 4-15μm depending on the size of the patch of observed fabric whose displacement is being followed. Fabric photography can also indicate other effects such as soil particle rotation and breakage which will not be detected by monitoring of individual markers (Fig 7). The great advantage of using such digital photographic techniques is that information concerning a very large number of points in the plane section of the model can be obtained extremely rapidly and analysed automatically with an objectivity that eliminates the human factor involved in many other techniques. We are essentially obtaining *field* rather than point information.

Some techniques that are appropriate to single gravity models can also be used, after a test, for centrifuge models. Radiography can be used to detect the location of threads of bismuth or lead paste injected before the test and hence spot failure surfaces within the soil. A similar result can be obtained by inserting coloured spaghetti into clay models: the softened pasta follows the movements of the clay without impediment (see, for example, Tamate & Takahashi, 2000). The spaghetti have to be located after the completion of the centrifuge test using exhumation techniques. An exhumation technique is also used by Muir Wood *et al.* (2000) to detect the deformed shape of model stone columns (similar to sand compaction piles) in soft clay after a loading test on a model footing at single gravity.

7 MODELLING AND TESTING

When Andrew Schofield promoted the use of geotechnical centrifuges in the west in the 1960s he had a vision of centrifuge modelling becoming an inevitable tool in geotechnical design. Craig (1985), who had used centrifuge modelling in support of design of actual prototypes such as major embankment dams, and foundations of offshore structures, wrote: *If centrifuge work is to continue, it should have a positive role beyond phenomenological studies and the development of design rules by parametric variation in idealised, non-specific models*. Lee (2002) talks of *the philosophy of modelling versus testing* – modelling leading to predictions, testing to validation. In practice, centrifuge modelling has probably been used more for study of generic problems than for reproduction of the response of particular prototypes.

Small features which may have a significant effect on system response cannot be directly modelled at small scale. Key features of soil fabric or of soil behaviour (such as the formation of patterns of localised deformation (Muir Wood, 2002)) with a characteristic length that is small by comparison with typical problem dimensions at prototype scale may be of the same order of magnitude as the scaled problem dimensions if prototype soil is used in the small model.

As in any modelling, boundaries have to be introduced with characteristics (complete absence of friction, for example) and locations which are appropriate to but will not unduly influence the system response being studied. Advantage can be taken of symmetry to insert a smooth centre-line boundary and study half the problem. Usually it will be desirable to make the active part of the geotechnical system – the foundation, wall, embankment, tunnel – as large as possible: this is where gradients of displacement will be greatest. However, there needs to be space beyond to the outer boundaries of the (usually rigid) container so that the active parts do not feel too constrained.

Inevitable compromises have to be made in reproducing geotechnical processes. Robotic possibilities are steadily increasing but the benefit of improved modelling of some details of construction, or of geological history has to be weighed against the cost of greater on-board complexity (and associated risk of malfunction) – and loss of pay-load capacity for the geotechnical elements of the model.

What centrifuge modelling does supremely well is to reveal mechanisms of geotechnical behaviour at prototype stress levels. Such behaviour can be revealed in problems covering a range of scales extending right up to neotectonics and mountain orogeny (Jeng *et al.*, 1998). The art of successful geotechnical centrifuge modelling is to ensure that the simplicities of the modelling do not distort these mechanisms. As many as possible of the likely important effects must be included. A centrifuge model is a closely controlled boundary value problem, conducted with real soils incorporating all their constitutive vagaries – many of which are hidden from the numerical or constitutive modeller. Data from a well-designed centrifuge model can be used to validate numerical modelling which, validated, can be used to extrapolate to closer modelling of prototype details.

It is as true for centrifuge modelling as for any other type of geotechnical modelling that you should always start out with a prediction of what you expect to happen. If the observation of the model manages to surprise and to confound these prior expectations, then reflection is required to develop deeper understanding and improve the next predictions. Indeed, a good model test is precisely one which surprises – this is the way in which scientific understanding advances – and we should try to design our model tests with this in mind. Scientific conjectures cannot be proved (absence of evidence *so far* which conflicts with a conjecture does not indicate that such evidence must always be absent), but they can be refuted. Rival hypotheses can be sifted using carefully chosen testing.

Looking at the proceedings of the conferences on centrifuge modelling that have taken place every few years over the past couple of decades one is struck by the way that this technique has reached a maturity in this period. Centrifuge modelling is now regarded as a legitimate tool to support geotechnical research or design. Papers seem less concerned with descriptions of centrifuge hardware, more concerned with novelties in process modelling and observation or quite simply with the presentation of geotechnical phenomena. Indeed the most recent conference (Phillips *et al.*, 2002) is deliberately devoted to 'physical modelling' rather than specifically to centrifuge modelling to emphasise the general acceptance of the centrifuge as one of a number of techniques of physical modelling and not one that requires special attention and justification.

Kimura (2000) charts the growth in centrifuge usage in Japan which is perhaps the only country where it has been adopted as a matter of routine in the way that Andrew Schofield had hoped. From 3 centrifuges in 1980, Japan had some 32 beam centrifuges and 5 drum centrifuges by 1998. The number is now certainly higher. More interesting than the number is their distribution: of the 37 centrifuges only 50% were in universities, 25% were in national research institutes and the remaining 25% in private industry, 19% in general contractors. These include some extremely large machines.

One may debate the merits of different centrifuge sizes. Evidently the larger the model the less the concern about the accuracy of representation of detail, the less the concern about the effects of particle size, or the larger the geotechnical prototypes that can be modelled. Evidently too the infrastructure required to keep large machines operational and in full usage is extensive. There is obviously a role for small machines that can be safely operated by individual researchers with little technical support. The more widely that such machines can calmly penetrate the world of undergraduate teaching the greater the likelihood that the potential of centrifuge modelling will become generally understood and accepted even by sceptical practising engineers and the greater the chance of the acceptance of the vigorous refutation by Schofield (2000) of Terzaghi's assertion of the 'utter futility' of attempts to rely on the results of small-scale geotechnical models.

REFERENCES

Allersma, HGB 1998. Development of cheap equipment for small centrifuges. *Proc. Int. Conf. Centrifuge 98*, Tokyo (eds T Kimura, O Kusakabe and J Takemura) AA Balkema, Rotterdam **1** 85-90.

Arulanandan, K and Scott, RF (eds) 1993/1994. *Verification of numerical procedures for the analysis of soil liquefaction problems* AA Balkema, Rotterdam (2 vols).

Craig, WH 1985. Centrifuge modelling for site-specific prototypes. *Application of centrifuge modelling to geotechnical design* (ed WH Craig) AA Balkema, Rotterdam 485-501.

Derkx, F, Merliot, E, Garnier, J and Cottineau, LM 1998. On-board remote-controlled centrifuge robot. *Proc. Int. Conf. Centrifuge 98*, Tokyo (eds T Kimura, O Kusakabe and J Takemura) AA Balkema, Rotterdam **1** 97-102.

Dyson, GJ and Randolph, MF 1998. Installation effects on lateral load-transfer curves in calcareous sands. *Proc. Int. Conf. Centrifuge 98*, Tokyo (eds T Kimura, O Kusakabe and J Takemura) AA Balkema, Rotterdam **1** 545-550.

Foray, P, Balachowski, L and Rault, G 1998. Scale effect in shaft friction due to the localisation of deformations. *Proc. Int. Conf. Centrifuge 98*, Tokyo (eds T Kimura, O Kusakabe and J Takemura) AA Balkema, Rotterdam **1** 211-216.

Garnier, J 2001. *Modéles physiques en géotechnique: état des connaissances et évolutions récentes* (1ère Biennale Coulomb) Comité Français de Mécanique des Sols et de Géotechnique, Paris.

Garnier, J 2002. Properties of soil samples used in centrifuge models. *Physical modelling in geotechnics: ICPMG'02*, Newfoundland (eds R Phillips, PJ Guo and R Popescu) AA Balkema Publishers, Lisse 5-19.

Gaudin, C, Garnier, J, Gaudicheau, P and Rault, G 2002. Use of a robot for in-flight excavation in front of an embedded wall. *Physical modelling in geotechnics: ICPMG'02*, Newfoundland (eds R Phillips, PJ Guo and R Popescu) AA Balkema Publishers, Lisse 77-82.

Gui, MW, Bolton, MD, Garnier, J, Corté, J-F, Bagge, G, Laue, J and Renzi, R 1998. Guidelines for cone penetration tests in sand. *Proc. Int. Conf. Centrifuge 98*, Tokyo (eds T Kimura, O Kusakabe and J Takemura) AA Balkema, Rotterdam **1** 155-160.

Jeng, FS, Lu, CY and Lee, CJ 1998. Major scale effects influencing model simulation of neotectonics. *Proc. Int. Conf. Centrifuge 98*, Tokyo (eds T Kimura, O Kusakabe and J Takemura) AA Balkema, Rotterdam **1** 911-916.

Kimura, T 2000. Development of geotechnical centrifuges in Japan. *Proc. Int. Conf. Centrifuge 98*, Tokyo (eds T Kimura, O Kusakabe and J Takemura) AA Balkema, Rotterdam **2** 945-954.

Kimura, T, Kusakabe, O and Takemura, J (eds) 1998/2000. *Proc. Int. Conf. Centrifuge 98*, Tokyo AA Balkema, Rotterdam (2 vols).

Lee, FH 2002. The philosophy of modelling versus testing. *Constitutive and centrifuge modelling: two extremes* (ed SM Springman) AA Balkema Pubilshers, Lisse 113-131.

Lings, ML and Greening, PD 2001. A novel bender/extender element for soil testing. *Géotechnnique* **51** (8) 713-717.

McNamara, AM and Taylor, RN 2002. Use of heave reducing piles to control ground movements around excavations. *Physical modelling in geotechnics: ICPMG'02*, Newfoundland (eds R Phillips, PJ Guo and R Popescu) AA Balkema Publishers, Lisse 847-852.

Madabhushi, SPG, Schofield, AN and Lesley, S 1998. A new Stored Angular Momentum (SAM) based earthquake actuator. *Proc. Int. Conf. Centrifuge 98*, Tokyo (eds T Kimura, O Kusakabe and J Takemura) AA Balkema, Rotterdam **1** 111-116.

Muir Wood, D 2002. Some observations of volumetric instabilities in soils. *International Journal of Solids and Structures* **39** (13-14) 3429-3449.

Muir Wood, D 2004a Experimental inspiration for kinematic hardening soil models. *Journal of Engineering Mechanics*, ASCE **130** 6, 656-664.

Muir Wood, D 2004b. *Geotechnical modelling.* Spon Press.

Muir Wood, D, Crewe, AJ and Taylor, CA 2002. Shaking table testing of geotechnical models. *International Journal of Physical Modelling in Geotechnics* **2** (1) 1-13.

Muir Wood, D, Hu, W, and Nash, DFT 2000. Group effects in stone column foundations: model tests. *Géotechnique* **50** (6) 689-698.

Phillips, R, Guo, PJ and Popescu, R (eds) 2002. *Physical modelling in geotechnics: ICPMG'02*, Newfoundland, AA Balkema Publishers, Lisse.

Schofield, AN 2000. Geotechnical centrifuge development can correct soil mechanics errors. *Proc. Int. Conf. Centrifuge 98*, Tokyo (eds T Kimura, O Kusakabe and J Takemura) AA Balkema, Rotterdam **2** 923-929.

Springman, SM, Nater, P, Chikatamarla, R and Laue, J 2002. Use of flexible tactile pressure sensors in geotechnical centrifuges. *Physical modelling in geotechnics: ICPMG'02*, Newfoundland (eds R Phillips, PJ Guo and R Popescu) AA Balkema Publishers, Lisse 113-118.

Stewart, DP and Randolph, MF 1991. A new site investigation tool for the centrifuge. *Proc. Int. Conf. Centrifuge 91*, Boulder (eds H-Y Ko and FG McLean) AA Balkema, Rotterdam 531-538.

Take, WA and Bolton, MD 2002. An atmospheric chamber for the investigation of the effect of seasonal moisture changes on clay slopes. *Physical modelling in geotechnics: ICPMG'02*, Newfoundland (eds R Phillips, PJ Guo and R Popescu) AA Balkema Publishers, Lisse 765-770.

Tamate, S and Takahashi, A 2000. Manual of basic centrifuge tests: 6, Slope stability test. *Proc. Int. Conf. Centrifuge 98*, Tokyo (eds T Kimura, O Kusakabe and J Takemura) AA Balkema, Rotterdam **2** 1077-1083.

Taylor, RN (ed) 1995. *Geotechnical centrifuge technology*. Blackie Academic and Professional, London.

Taylor, RN, Grant, RJ, Robson, S and Kuwano, J 1998. An image analysis system for determining plane and 3-D displacements in soil models. *Proc. Int. Conf. Centrifuge 98*, Tokyo (eds T Kimura, O Kusakabe and J Takemura) AA Balkema, Rotterdam **1** 73-78.

White, DJ and Bolton, MD 2002. Soil deformation around a displacement pile in sand. *Physical modelling in geotechnics: ICPMG'02*, Newfoundland (eds R Phillips, PJ Guo and R Popescu) AA Balkema Publishers, Lisse 649-654.

Yet, NS, Leung, CF and Lee, FH 1994. Behaviour of axially loaded piles in sand. *Proc. Int. Conf. Centrifuge 94*, Singapore (eds CF Leung, FH Lee and TS Tan) AA Balkema, Rotterdam 461-466.